ARGE ROBOTİK

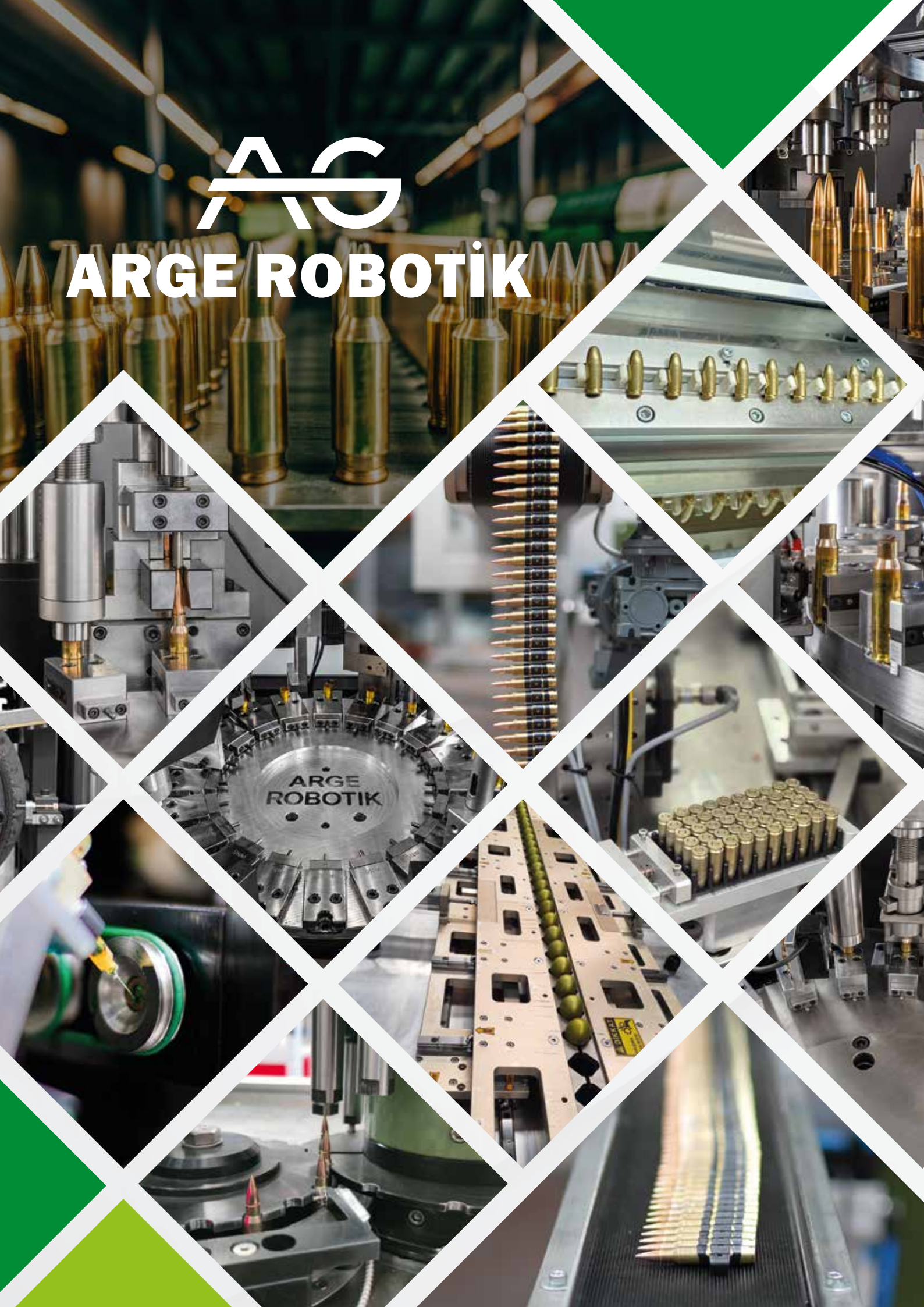

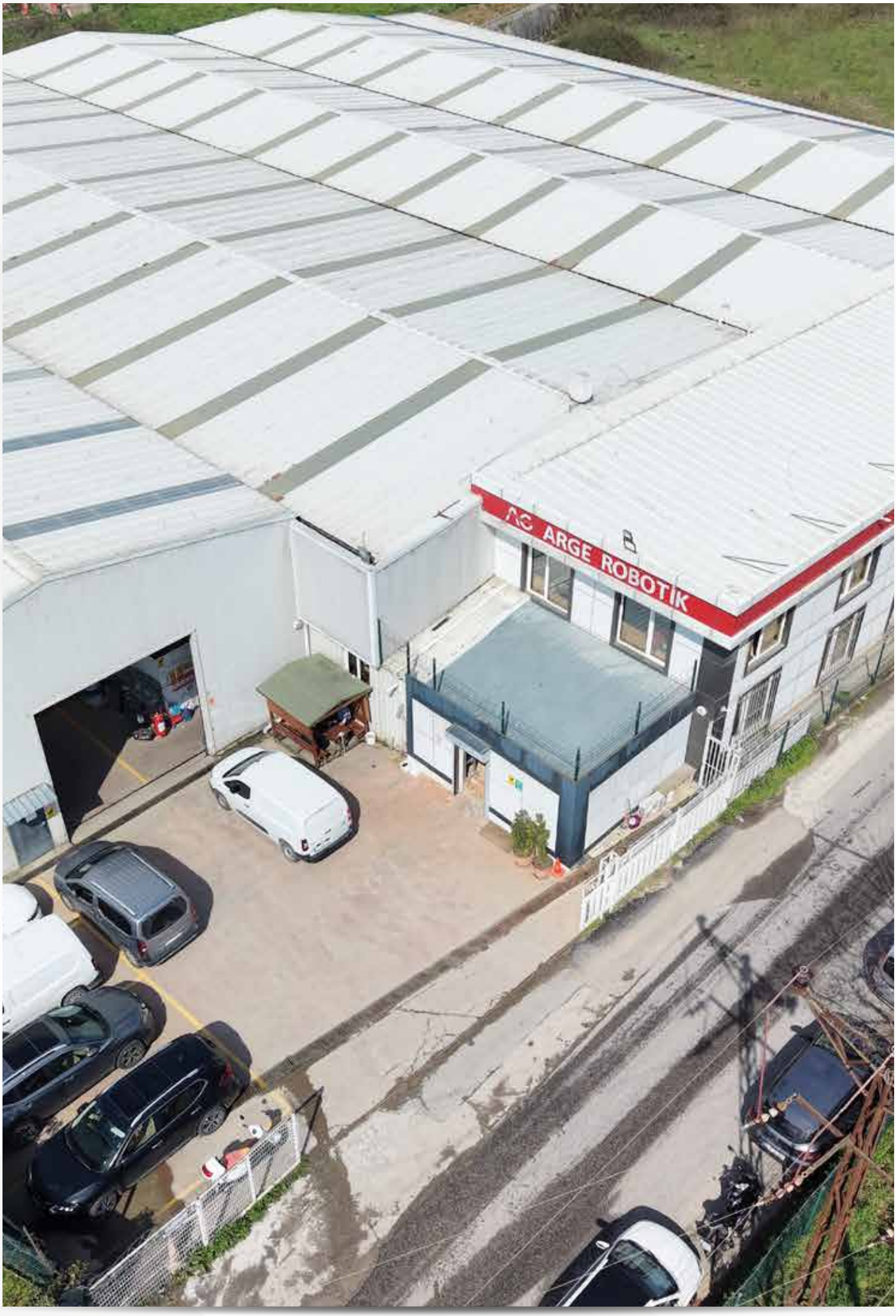
ARGE ROBOTİK



ADVANCED AUTOMATION

FOR AMMUNITION MANUFACTURING

ARGE Robotik provides state-of-the-art automation systems and turnkey solutions for ammunition production facilities worldwide. Our commitment to quality, precision engineering, and customer satisfaction has made us a trusted supplier to defense manufacturers across multiple continents.

Innovative Solutions • Proven Reliability • Global Support

argerobotik.com


ARGE
ROBOTIK
9NM
9NM
9NM
9NM
9NM

Primer Inserting & Primer Crimping Machine (240 PPM)

System Overview

This fully automated primer insertion and crimping machine is designed for high-speed, precision ammunition production. It performs primer seating and crimping with selectable options including 3-point or 360° annular crimping, ensuring secure retention and consistent performance. The system operates at up to 240 cases per minute with fully controlled insertion force and seating depth.

An integrated inspection system verifies primer presence, correct orientation, and anvil alignment prior to seating, while also checking primer pocket geometry, flash hole presence, and post-seating primer depth for full dimensional compliance. Crimping quality is continuously monitored to ensure uniformity and integrity.

Non-conforming cases and primers are automatically removed from the process, ensuring only validated components proceed. The modular design supports multi-caliber production with rapid changeover kits, enabling flexible and efficient operation with minimal downtime.



Technical Specifications

PARAMETER	SPECIFICATION		
Application	Primer Inserting – Primer Crimping Machine		
Production Speed	240 case/min		
Supported Calibers	9x18/9x19/5.56x45/7.62x51/7.62x39/5.45x39/12.7x99 etc.		
Dimensions (LxWxH)	1400 x 1600 x 3250 mm	Weight	Approx. 3000 kg
Power Supply	380V / 50Hz / 3 Phase		
Inspection	Primer Depth / Crimping Quality / Primer Inspection		
Input Material/s	Unprimed Cases / Primer		
Output Material	Primed / Crimped Cases		
Number of Stations	6	Power Consumption	5 kW
Air Consumption	200 L/min @ 6–7 bar	Pneumatic System	FESTO, SMC
Control System	PLC + Touch Screen	PLC	Siemens
Conversion Kits	Available per request	Safety Standards	CE, ATEX, IP65
Feeding Unit	Hopper & Elevator Conveyor		
Labor Requirements	1 Operator / Shift		

Machine Work Sequence

1	Cases are fed into the machine through the controlled feeding system.
2	Case orientation is aligned and stabilized for correct positioning.
3	Primer pocket geometry and flash hole presence are inspected before processing.
4	Primer presence, orientation, and anvil condition are verified.
5	Cases not meeting inspection criteria are removed from the process.
6	Primers are transferred to the seating station via the feeding system.
7	Primers are inserted into the cases with controlled force and positioning.
8	Primer seating depth is measured and verified for dimensional accuracy.
9	Primers are crimped using either 3-point or 360° annular crimping as specified.
10	Final inspection confirms crimping quality and overall conformity before discharge.

Primer Inserting & Primer Crimping Machine (120 PPM)

Machine Overview

The primer inserting and crimping machine is designed for both pistol and rifle cartridges. The system is based on a rotary transfer concept and consists of two main rotary stations, each containing 18 working positions.

The machine performs full case geometry inspection, including primer pocket depth verification and flash hole presence check. On the primer side, it ensures correct primer orientation and confirms anvil presence before insertion.

Primer insertion force is precisely controlled through the machine mechanism, as is the crimping force. The system supports both O-ring (circular) and 3-point crimping methods depending on product requirements.

After primer insertion and crimping, an integrated vision system performs quality inspection, checking crimp integrity and measuring primer seating depth within a tolerance range of 0.05–0.15 mm.





Technical Specifications

PARAMETER	SPECIFICATION		
Application	Primer Inserting - Primer Crimping Machine (120 PPM)		
Supported Calibers	9x18/9x19/5.56x45/7.62x51/7.62x39/5.45x39/12.7x99 etc.		
Dimensions (LxWxH)	5000 x 1400 x 3300 mm	Weight	Approx. 1900 kg
Power Supply	380V / 50Hz / 3 Phase		
Inspection	Primer depth / Crimping Quality / Primer Inspection		
Input Material/s	Unprimed Cases / Primer		
Output Material	Primed / Crimped Cases		
Air Consumption	250L/min@6-7 bar	Pneumatic System	FESTO, SMC
Control System	PLC + Touch screen	PLC	Siemens
Conversion Kits	Available Per Request	Labor Requirements	1 Operator/shift
Feeding Unit	Vibration Feeder / Hopper & Elevator conveyor		

Machine Work Sequence

1	Cases are loaded into the elevator hopper and transferred to the feeder system hopper for controlled feeding into the system.
2	Primers are loaded into the vibration unit for correct orientation and alignment.
3	Primers pass through an exit path check to verify correct orientation and detect any damage.
4	Cases undergo flash hole presence verification and primer pocket depth check before processing continues.
5	Cases are positioned into the main processing station for operation.
6	Primers are positioned into the station for insertion preparation.
7	The system coordinates synchronized operation of case and primer handling for continuous processing.
8	Primers are inserted into the cases with controlled force for accurate seating.
9	Primers are crimped using O-ring or 3-point crimping methods.
10	Primer depth is measured using vision inspection, and crimping quality is checked separately before final acceptance.

Versatile Pistol Primer Inserting Machine (60 PPM)

Machine Overview

This machine is designed for precise primer insertion into the primer pockets of pistol cartridges such as 9×18, 9×19, .32 ACP, .38 ACP, and .45 ACP.

The system performs full case geometry inspection, including primer pocket depth and flash hole verification, while also checking primer orientation and overall primer quality. Non-conforming cases and primers are automatically removed from the process to ensure consistent production quality.

At the exit stage, the machine measures primer seating depth to ensure compliance within a tolerance range of 0.00–0.15 mm, guaranteeing uniform and accurate primer positioning.



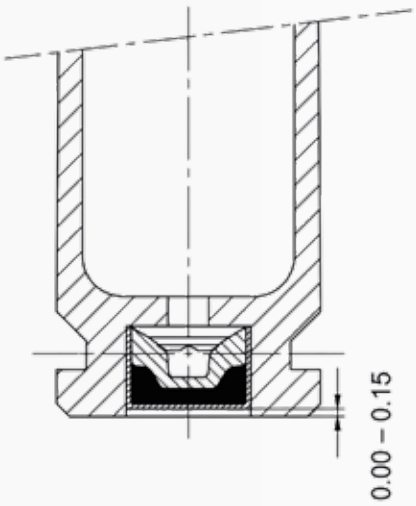





Technical Specifications

PARAMETER	SPECIFICATION
Supported Calibers	9x18 / 9x19 / 0.32 ACP, 0.38, 0.45 ACP
Dimensions	1000 x 1400 x 2600 mm
Weight	Approx. 1000 kg
Power Supply	380V / 50Hz / 3 Phase
Inspection	Primer Depth / Case Geometri
Input Material/s	Unprimed Cases / Primer
Output Material	Primed Cases
Power Consumption	2 kW
Air Consumption	50 L/mi @ 4-5 bar
Control System	PLC+ Touch Screen
PLC	Siemens

Machine Work Sequence

1	Cases are fed into the machine through the automatic feeding system.
2	Case orientation is aligned and stabilized for correct positioning.
3	Primer pocket depth and flash hole presence are inspected for each case.
4	Primer quality and correct orientation are verified before feeding.
5	Non-conforming cases and primers are removed from the process.
6	Primers are transferred to the insertion station via the feeding system.
7	Primers are inserted into the primer pocket with controlled force.
8	Primer seating is stabilized to ensure correct positioning in the case.
9	Primer depth is measured at the exit stage for compliance verification.
10	Accepted cases are discharged for the next production process.

Primer Sealing & Case Mouth Varnishing Machine (240 PPM)

System Overview

This fully automated primer sealing and case mouth varnishing machine is designed for high-speed, precision application in ammunition production lines. It ensures continuous case processing with controlled orientation and zero possibility of reverse cases, applying solvent-based sealant to the primer annulus and bitumen to the case mouth under tightly controlled conditions.

The system includes integrated inspection for primer presence, case geometry, and sealing quality, ensuring only compliant cases proceed. Sealing is optimized for material efficiency and verified through 100% waterproofing and bubble test performance.

The machine achieves up to 240 cases per minute and is compatible with solvent and bitumen sealing materials. It features low maintenance, high durability, PLC-based real-time monitoring, multi-Caliber capability with quick changeover kits, and can be supplied in ATEX-compliant configuration upon request.



Primer base varnish around the primer

Technical Specifications

PARAMETER	SPECIFICATION		
Application	Primer Sealing - Case Mouth Varnishing Machine (240 PPM)		
Production Speed	240 Case/min		
Supported Calibers	9x18/9x19/5.56x45/7.62x51/7.62x39/5.45x39/12.7x99 etc.		
Dimensions (LxWxH)	1000 x 2000 x 2500 mm	Weight	Approx. 1700 kg
Power Supply	380V / 50Hz / 3 Phase		
Inspection	Case Geometry, Primer Presence / Sealing Quality		
Input Material/s	Primed Cases / Sealant (Solvent, Bitumen)		
Output Material	Sealed Cases Ready for Loading		
Number of Stations	6	Power Consumption	7 kW
Air Consumption	200 L/min 6-7 bar	Pneumatic System	FESTO, SMC
Control System	PLC+ Touch Screen	PLC	Siemens
Conversion Kits	Available Per Request	Safety Standards	CE, ATEX, IP65
Feeding Unit	Hopper & Elevator Conveyor		
Labor Requirements	1 Operator/Shift		

Machine Work Sequence

1	Cases are fed into the system through the feeding conveyor with controlled orientation.
2	Case alignment is ensured to eliminate reverse or incorrect positioning.
3	Primer presence is verified and case mouth geometry is inspected before processing.
4	Non-conforming cases are automatically removed from the production line.
5	Accepted cases are transferred to the rotary processing system for sealing.
6	Solvent-based sealant is applied to the primer annulus under controlled dosing.
7	Bitumen is applied to the case mouth for sealing protection.
8	Sealing quality is monitored during the process using integrated inspection systems.
9	Cases are discharged to the exit conveyor and subjected to initial drying.
10	Final verification ensures sealing integrity and readiness for subsequent processing or storage.

Primer Sealing & Case Mouth Varnishing Machine (120 PPM)

Machine Overview

The machine is designed for primer and case mouth sealing using solvent-based sealant and bitumen application. It is equipped with **three independent feeders** to ensure continuous and stable case supply, with **zero possibility of reverse cases** due to controlled orientation systems. The machine can also be supplied in compliance with **ATEX standards upon request** for operation in explosive environments.

Cases are transported via a rotary tambour system to the sealing and varnishing station. At this station, the system performs primer presence verification and case mouth circularity inspection. Any cases without a primer or with non-conforming mouth geometry are automatically removed before sealant application.

Sealing is performed using precision needles controlled by air valves, ensuring accurate and consistent application on both the primer pocket and case mouth areas. At the discharge section, integrated fans provide initial drying of the applied sealant.

After a curing period of approximately 8 hours, the cases are ready for subsequent loading operations. The process ensures 100% waterproofing, with all units passing the bubble test successfully.







Technical Specifications

PARAMETER	SPECIFICATION
Application	Primer Sealing - Case Mouth Varnishing Machine (120 PPM)
Production Speed	120 PPM
Supported Calibers	9x18/9x19/5.56x45/7.62x51/7.62x39/5.45x39/12.7x99 etc.
Dimensions (LxWxH)	1000 x 2000 x 2500 mm
Weight	Approx. 2000 kg
Power Supply	380V / 50Hz / 3 Phase
Inspection	Case Mouth, Primer / Sealing Quality
Input Material/s	Primed Cases / Sealant (Solvent, Bitumen)
Output Material	Sealed Cases Ready for Loading
Power Consumption	4 kW
Pneumatic System	FESTO, SMC
Air Pressure	200 L/min @6 bar
Control System	PLC + Touch Screen
PLC	Siemens

Machine Work Sequence

1	Cases are loaded onto the feeding conveyor (elevator), which transfers them to the rotational feeder (culator).
2	The rotational feeder distributes cases into ring lines and directs them toward the machine feeding section.
3	Case orientation is checked using sensors to ensure correct positioning.
4	Case mouth circularity is verified within specified tolerances.
5	Primer presence in each case is confirmed before processing.
6	Cases not meeting orientation, mouth condition, or primer presence requirements are removed from the line.
7	Accepted cases are aligned and inserted into the rotating tambour via the feeding mechanism.
8	During tambour rotation, bitumen sealant is applied to the primer pocket and case mouth.
9	Cases are discharged onto the exit conveyor and dried using integrated fans.
10	Dried, sealed cases are conveyed to the discharge end for collection.

Primer Sealing & Case Mouth Varnishing Machine (60PPM)

Machine Overview

The machine is designed for primer and case mouth sealing using solvent-based sealant and bitumen application. It features a single case feeder and a rotary tambour system that transports cases to the sealing and varnishing station.

At the sealing station, the system performs primer presence verification and case mouth circularity inspection. Any cases found without a primer or with non-conforming mouth geometry are automatically rejected before sealant application.

Sealing is carried out using precision needles controlled by air valves to ensure accurate and consistent application on both the primer and case mouth areas. At the discharge point, integrated fans provide initial drying of the sealant.
After a curing period of approximately 8 hours, the cases are ready for subsequent loading operations.

100% waterproofing is achieved and all units successfully pass the bubble test.









Primer base varnish around the primer

Technical Specifications

PARAMETER	SPECIFICATION
Application	Primer Sealing - Case Mouth Varnishing Machine (60 PPM)
Production Speed	60 PPM
Supported Calibers	9x18/9x19/5.56x45/7.62x51/7.62x39/5.45x39/12.7x99 etc.
Dimensions (LxWxH)	1000 x 2000 x 2500 mm
Weight	Approx. 1500 kg
Power Supply	380V / 50Hz / 3 Phase
Inspection	Case Mouth, Primer / Sealing Quality
Input Material/s	Primed Cases/Sealant (Solvent, Bitumen)
Output Material	Sealed Cases Ready for Loading
Power Consumption	4 kW
Pneumatic System	FESTO, SMC
Air Pressure	200 L/min @6 bar
Control System	PLC + Touch Screen
PLC	Siemens

Machine Work Sequence

1	Cases are loaded onto the feeding conveyor (elevator), which transfers them to the rotational feeder (culator).
2	The rotational feeder distributes cases into ring lines and directs them toward the machine feeding section.
3	Case orientation is checked using sensors to ensure correct positioning.
4	Case mouth circularity is verified within specified tolerances.
5	Primer presence in each case is confirmed before processing.
6	Cases not meeting orientation, mouth condition, or primer presence requirements are removed from the line.
7	Accepted cases are aligned and inserted into the rotating tambour via the feeding mechanism.
8	During tambour rotation, bitumen sealant is applied to the primer pocket and case mouth.
9	Cases are discharged onto the exit conveyor and dried using integrated fans.
10	Dried, sealed cases are conveyed to the discharge end for collection.

Loading & Assembly Machine (240 PPM)

System Overview

- Fully automated high-precision rotary ammunition assembly system for multi-calibre cartridge production
- Supports 7.62×51mm, 7.62×51mm Blank (M82), 7.62×39mm, 5.56×45mm ,5.56x45 Blank (M200) and 9x19mm cartridges.
- Core architecture based on 7 rotating turret systems, each with 12 stations for continuous high-volume output
- Continuous rotary process including case inspection, propellant metering, projectile insertion, bullet seating, crimping, and final dimensional verification
- Case feeding system starts with lacquered cases loaded into an elevator hopper, followed by automated separation and distribution
- Dual centrifugal bowl system ensures correct case orientation before transfer to machine feeders
- Bullet feeding via dedicated vertical elevator system supplying projectiles to the assembly line
- Integrated in-line quality control for monitoring case geometry, charge consistency, seating accuracy, and final cartridge dimensions
- Automatic rejection of non-conforming cartridges without interrupting production flow
- Modular platform enabling rapid calibre changeover using dedicated conversion kits (pistol and rifle systems)
- Supports flexible production including live and blank ammunition configurations
- Fully enclosed, safety-interlocked system ensuring operator safety
- ATEX-compliant design for safe handling of energetic materials
- PLC-based HMI control system with real-time monitoring, diagnostics, and production tracking
- Designed for high-throughput, defense-grade industrial ammunition manufacturing environments









Technical Specifications

PARAMETER	SPECIFICATION		
Application	Loading - Assembly Machine (240 PPM)		
Production Speed	240 Cartridges/min		
Supported Calibers	9x18 / 9x19 / 5.56x45 / 7.62x51 / 7.62x54 / 7.62x39 / 5.45x39		
Dimensions (LxWxH)	3200 x 1000 x 2600 mm	**Weight**	Approx. 3000 kg
Power Supply	380V / 50Hz / 3 Phase		
Inspection	Case Geometry / Gunpowder Existing & Level Full Form (Load Ability)		
Input Material/s	Primed - Sealed Cases / Bullet / Gunpowder		
Output Material	Complete Cartridges		
Number of Stations	7	**Power Consumption**	5 kW
Air Consumption	300 L/min 6-7 bar	**Pneumatic System**	FESTO, SMC
Control System	PLC + Touch Screen	**PLC**	Siemens
Conversion Kits	Available Per Request		
Feeding Unit	Hopper & Elevator Conveyor		
Labor Requirements	1 Operator/shift		

Machine Work Sequence

1	**Dual Feed Loading** – Two cases are loaded per cycle into rotary turrets.
2	**Turret 1** – Case Inspection – Checks orientation and mouth defects; rejects faulty cases.
3	**Turret 2** – Propellant Charging – Precisely doses gunpowder per calibre
4	**Turret 3** – Propellant Check – Verifies powder presence and level; rejects errors.
5	**Turret 4** – Bullet Insertion – Places projectile; skips rejected cases.
6	**Turret 5** – Seating & Length – Seats bullet and adjusts overall length.
7	**Turret 6** – Crimping – Secures projectile by crimping case mouth.
8	**Turret 7** – Final Inspection – Checks form, dimensions, and assembly quality; rejects defects.
9	**Dynamic Weighing** – Measures final cartridge weight against tolerance; rejects non-compliant units.

Loading & Assembly Machine (120 PPM)

System Overview

- The machine is designed for fully automatic loading and assembly of Pistol & Rifle cartridges
- Propellant filling is adjustable, allowing setting within defined minimum and maximum volume/weight limits.
- The system achieves propellant filling accuracy of X ± 0.01 gram.
- The machine detects and handles cases with no propellant or insufficient propellant.
- Bullet insertion and alignment are performed to ensure overall height compliance with international standards.
- Crimping force is adjustable and set in accordance with required bullet extraction force standards.
- The system verifies final cartridge dimensions and detects units outside overall length tolerance.







Technical Specifications

PARAMETER	SPECIFICATION		
Application	Loading - Assembly Machine (120 PPM)		
Production Speed	120 Cartridges/min		
Supported Calibers	9x19 / 5.56x45 / 7.62x51 / 7.62x39 / 5.45x39 / 7.62x54 etc.		
Dimensions (LxWxH)	1100 x 1200 x 2400 mm	**Weight**	Approx. 2000 kg
Power Supply	220V / 380V / 50Hz / Single / 3 Phase		
Inspection	Case Geometry / Gunpowder Existing & Level / Full Form (Load Ability)		
Input Material/s	Primed - Sealed Cases / Bullet / Gunpowder		
Output Material	Complete Cartridges		
Air Consumption	200 L/min 6-7 bar	**Pneumatic System**	FESTO, SMC
Control System	PLC+ Touch Screen	**PLC**	Siemens
Conversion Kits	Available Per Request		
Feeding Unit	Hopper & Elevator Conveyor		
Labor Requirements	1 Operator / Shift		

Machine Work Sequence

1	Case feeding and positioning ensure accurate placement of the case for processing
2	Case presence, alignment, reverse, and straight controls manage correct case handling.
3	Case mouth circularity is checked and corrected if required.
4	Case mouth is expanded (flared) to prepare for bullet seating.
5	Powder is charged into the case according to defined grammage.
6	Powder presence and correct quantity are verified.
7	Bullet is precisely seated into the case.
8	Crimping secures the bullet in the case.
9	Full form check verifies overall cartridge dimensions.
10	Final inspection ensures overall length and quality compliance.

Pistol Loading & Assembly Machine (60 PPM)

System Overview

- The machine is designed for fully automatic loading and assembly of Pistol & Rifle cartridges
- Propellant filling is adjustable, allowing setting within defined minimum and maximum volume/weight limits.
- The system achieves propellant filling accuracy of X ± 0.01 gram.
- The machine detects and handles cases with no propellant or insufficient propellant.
- Bullet insertion and alignment are performed to ensure overall height compliance with international standards.
- Crimping force is adjustable and set in accordance with required bullet extraction force standards.
- The system verifies final cartridge dimensions and detects units outside overall length tolerance.





Technical Specifications

PARAMETER	SPECIFICATION		
Application	Pistol Loading - Assembly Machine (60 PPM)		
Production Speed	60 Cartridges/min		
Supported Calibers	9x18,9x19 / 0.32 ACP / 0.38ACP / 0.45 ACP		
Dimensions (LxWxH)	1100 x 1200 x 2400 mm	Weight	Approx. 1500 kg
Power Supply	220V / 380V / 50Hz / Single / 3 Phase		
Inspection	Case Geometry / Gunpowder Existing & Level Full Form (Load Ability)		
Input Material/s	Primed - Sealed Cases / Bullet / Gunpowder		
Output Material	Complete Cartridges		
Air Consumption	150 L/min 4-5 bar	Pneumatic System	FESTO, SMC
Control System	PLC+ Touch Screen	PLC	Siemens
Conversion Kits	Available Per Request		
Feeding Unit	Hopper & Elevator Conveyor		
Labor Requirements	1 Operator/shift		

Machine Work Sequence

1	Case feeding and positioning ensure accurate placement of the case for processing
2	Case presence, alignment, reverse, and straight controls manage correct case handling.
3	Case mouth circularity is checked and corrected if required.
4	Case mouth is expanded (flared) to prepare for bullet seating.
5	Powder is charged into the case according to defined grammage.
6	Powder presence and correct quantity are verified.
7	Bullet is precisely seated into the case.
8	Crimping secures the bullet in the case.
9	Full form check verifies overall cartridge dimensions.
10	Final inspection ensures overall length and quality compliance.

UV Sealing Machine

Machine Overview

The Automated UV Cartridge Sealing System is a high-speed production machine for primer seam and projectile mouth sealing of small to medium caliber cartridges. It features automatic feeding, precision UV sealant application, dual vision inspection, UV curing, and automatic rejection in a fully continuous line.

Cartridges are automatically oriented and conveyed through sequential processes including primer and case mouth sealing, dual-camera inspection, UV curing, and removal of defective units via a servo-driven reject system.

The system operates at up to 200 cartridges per minute and uses dual precision nozzles, centralized PLC control (Keyence/Siemens), and an industrial HMI interface. It is designed for OEE > 90%, supports multiple calibers with quick changeover, and integrates with downstream UV conveyor systems for immediate stabilization of the applied UV sealant.





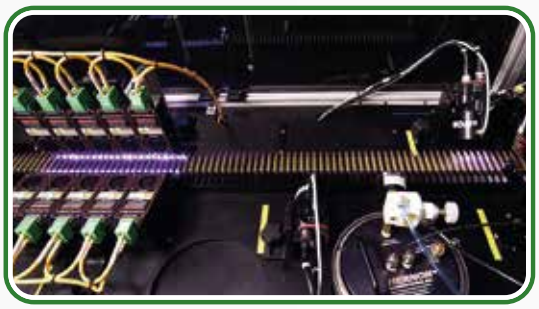



Technical Specifications

PARAMETER	SPECIFICATION
Application	UV Sealing Machine
Production Speed	200 PPM
Supported Calibers	9x18/9x19/5.56x45/7.62x51/7.62x39/5.45x39/12.7x99 etc.
Dimensions (LxWxH)	2000 x 1000 x 2000 mm
Weight	Approx. 700 kg
Power Supply	380V / 50Hz / 3 Phase
Inspection	Primer Seam Sealing / Projectile Mouth Sealing
Input Material/s	Cartridge / Sealant Liquid
Output Material	Sealed Cartridges
Power Consumption	2KW
Pneumatic System	FESTO, SMC
Number of Cameras	2
Number of UV Lamps	9
Air Pressure	100 L/min 6 bar
Control System	PLC+ Touch Screen
PLC	Siemens

Machine Work Sequence

1	Primer seam sealing
2	Case mouth sealing
3	Dual vision inspection (primer + mouth)
4	UV curing (drying stage)
5	Automatic rejection of defective units
6	Eject of OK cartridges

Ammunition Tip Painting Machine

Machine Overview – Tip Painting Machine

The **Tip Painting Machine** is a high-speed, precision-engineered system designed for the identification of small arms ammunition.

Developed in line with modern military production standards (e.g., NATO / Mil-Spec), the machine performs **projectile tip painting,** ensuring reliable visual identification of different ammunition types.

The system utilizes a **continuous rotary drum mechanism**, enabling uninterrupted feeding, processing, and discharge of cartridges. This design supports high-throughput production environments while maintaining consistent coating quality and repeatability.

Cartridges are automatically fed into the system, transferred through a controlled painting station where projectile tips are coated via dipping or precision application, and then conveyed through a drying section before discharge. The process ensures uniform paint thickness and strong adhesion, meeting strict military and industrial requirements.

As an **optional feature,** the machine can be equipped with **a neck sealing (varnishing) unit.** This function is intended to provide **additional protection against corrosion and environmental effects,** enhancing the durability and storage life of cartridges rather than serving as a primary identification process.





Technical Specifications

PARAMETER	SPECIFICATION
Application	Ammunition Tip Painting Machine
Production Speed	120 PPM (Each Station)
Supported Calibers	5.56 x 45 / 7.62 x 51 / 7.62 x 39 / 5.45 x 39 / 12.7 x 99
Dimensions (LxWxH)	2800 x 1900 x 2400 mm
Weight	Approx. 2000 kg
Power Supply	380V / 50Hz / 3 Phase
Inspection	Tracer / Bullet ex
Input Material/s	Tracer Cartridges / Paint
Output Material	Tip Painted Cartridges
Power Consumption	4 kW
Pneumatic System	FESTO, SMC
Air Pressure	200 L/min 6 bar
Control System	PLC + Touch Screen
PLC	Siemens

Machine Work Sequence

1	Cartridge feeding and orientation
2	Insertion into transfer rail
3	Tip painting (dip or controlled application)
4	Transfer and drying stage
5	Discharge and collection

Belt Linking Machine

Machine Overview – Ammunition Belt Linking Machine

The **ammunition belt linking machine** is an automated system designed for assembling cartridges into linked ammunition belts according to predefined sequences, quantities, and customer specifications. The system integrates multiple feeding, orientation, assembly, and inspection modules to ensure high accuracy, consistency, and production efficiency.

The machine consists of a **vibration-based link orientation system,** multiple **cartridges feeding units,** a **rotational cam linking mechanism,** and integrated **sensor-based quality control systems.**

The vibratory system aligns and feeds links in the correct orientation into a continuous row. Cartridge feeders supply **ball, tracer,** and optionally **tungsten cartridges,** each synchronized with the main system. The linking process is performed through a **rotational cam assembly unit,** where cartridges are precisely inserted into the links.

A **color sensor system** is integrated to verify correct placement of tracer cartridges, ensuring that cartridge type accuracy is maintained throughout production. In addition, a **counting system** monitors and controls the exact number of cartridges per belt, ensuring compliance with programmed configurations.

The machine is designed for flexibility, allowing different cartridge combinations, sequencing patterns, and belt lengths based on customer requirements.









Technical Specifications

PARAMETER	SPECIFICATION
Application	Belt Linking Machine
Production Speed	120 PPM
Supported Calibers	5.56 x 45 / 7.62 x 51 / 12.7 x 99
Dimensions (LxWxH)	3850 x 2915 x 2735 mm
Weight	Approx. 1500 kg
Power Supply	380V / 50Hz / 3 Phase
Inspection	Tracer / Bullet ex
Input Material/s	Links / Ball Cartridges / Tracer Cartridges
Output Material	Belt Linked Cartridges
Power Consumption	4 kW
Pneumatic System	FESTO, SMC
Air Pressure	200L / min 6 bar
Control System	PLC + Touch Screen
PLC	Siemens

Machine Work Sequence

Step 01 | Link Feeding & Orientation

Bulk links are fed into a vibratory system, where they are oriented and arranged into a uniform flow toward the assembly section.

Step 02 | Cartridge Feeding

Ball, tracer, and optional tungsten cartridges are supplied from separate feeders, metered according to the programmed sequence.

Step 03 | Synchronization & Transfer

Links and cartridges are synchronized and transferred to the rotational cam assembly system.

Step 04 | Linking Process

The cam mechanism positions each link and inserts cartridges in the correct sequence, forming the belt continuously.

Step 05 | Sensor Verification

A color sensor checks tracer placement in real time, detecting any misplacement or missing cartridges.

Step 06 | Counting & Control

The system counts cartridges per belt and ensures the correct quantity and programmed sequence.

Step 07 | Output The completed belt is discharged, ready for inspection, packaging, or further processing.

Camera (Optical) Inspection (Gauging) Machine for Primers, Bullets, Cases or Cartridges

Machine Overview - Optical Inspection Machine

The Optical Inspection Machine is a cutting-edge quality control solution designed to meticulously inspect the dimensions and overall quality of cases, cartridges, primers, and bullets. Equipped with a rotary feeder, three high-resolution European cameras, and a high-precision detection system, the machine ensures reliable, high-speed inspection while maintaining the highest standards of accuracy and consistency in production.







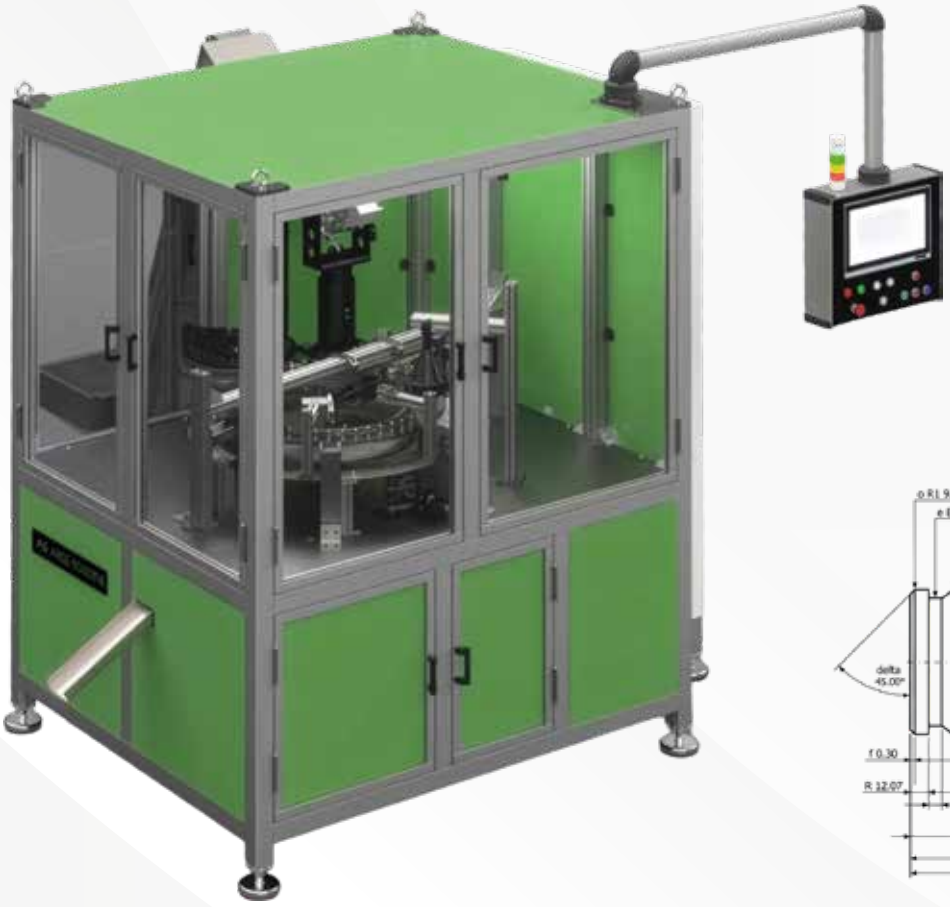

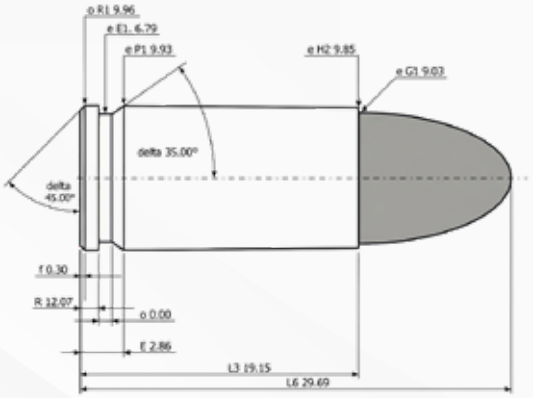

Technical Specifications

PARAMETER	SPECIFICATION
Application	Camera Inspection (gauging) Machine for Primers, Bullets, Cases or Cartridges
Production Speed	120 PPM
Supported Calibers (primers, Bullets,Cases, Cartridges & Primers)	9 x 18 / 9 x 19 / 5.56 x 45 / 7.62 x 51 / 7.62 x 39, 5.45 x 39 / 12.7 x 99 etc.
Dimensions (LxWxH)	2000 x 1500 x 2500 mm
Weight	Approx. 1200 kg
Power Supply	380V / 50Hz / 3 Phase
Inspection	Dimensions / Surface /etc.
Input Material/s	Primer, Bullets, Case or Cartridge
Output Material	Inspected Primer, Bullet, Case or Cartridge
Power Consumption	2 kW
Pneumatic System	FESTO, SMC
Air Pressure	150 L / min 6 bar
Control System	PLC + Touch Screen
PLC	Siemens

Machine Work Sequence

- Cartridges are loaded onto the infeed conveyor and transferred to the rotary bowl, where they are oriented and fed onto the rotary table.
- A fork sensor detects each cartridge and records its position for synchronized inspection.
- **Camera 1 (Side View):** Measures critical dimensions (diameters, overall length, neck geometry).
  - Defective parts are rejected via Blow-Off 1 into Reject Bin 1.
- **Camera 2 (Top View):** Inspects surface defects (scratches, dents, stains, impacts)
  - Defective parts are rejected via Blow-Off 2 into Reject Bin 2.
- **Camera 3 (Bottom View):** Checks headstamp markings and primer presence.
  - Defective parts are rejected via Blow-Off 3 into Reject Bin 3.
- Cartridges that pass all inspections continue to the final output as accepted (OK) products.

Visual Inspection Table For Cases Or Cartridges

Machine Overview

The machine is designed for comprehensive visual inspection of ammunition components, including cases and complete cartridges. During operation, cases rotate 360° on the conveyor, allowing full surface exposure for detailed inspection.

The operator performs visual quality control using integrated mirror systems, enabling clear observation of all sides of the rotating components. The system allows detection and rejection of various defects, including cracks, deformities, surface irregularities, and other non-conformities in casing or cartridge assembly.







Technical Specifications

PARAMETER	SPECIFICATION
Application	Visual inspection table for cases or cartridges
Production Speed	120 PPM
Supported Calibers	9x18/9x19/5.56x45/7.62x51/7.62x39/5.45x39/12.7x99 etc.
Dimensions (LxWxH)	2000 x 1000 x 2000 mm
Weight	Approx. 900 kg
Power Supply	380V / 50Hz / 3 Phase
Inspection	Case mouth, primer/sealing quality
Input Material/s	Case or Cartridge
Output Material	Inspected Case or Cartridge
Power Consumption	2KW
Pneumatic System	FESTO, SMC
Air Pressure	100L/min 6 bar
Control System	PLC+ Touch screen
PLC	Siemens

Machine Work Sequence

1	Cases or cartridges are fed into the conveyor system for inspection.
2	The conveyor transports components into the inspection zone.
3	Each case or cartridge is rotated 360° for full surface exposure.
4	Integrated mirrors provide multi-angle visibility for the operator.
5	The operator performs continuous visual inspection during rotation.
6	Surface condition is checked for cracks, deformities, and irregularities.
7	Cartridge and case assembly integrity is verified during inspection.
8	Defective components are identified based on visual criteria.
9	Non-conforming cases or cartridges are removed from the line.
10	Accepted components are discharged for further processing or packaging.

9x19 mm Visual inspection & Packaging Machine (2 in 1)

Machine Overview

The system is a **2-in-1 machine** designed for **visual inspection and automatic stacking of 9×19 mm cartridges into plastic trays.**

Cartridges are fed from a culator (feeder) into a rotating inspection unit, where each cartridge is presented to the operator with a **360° rotation.** This allows full visual inspection for defects such as cracks, primer issues, bullet seating problems, or other abnormalities.

The machine is semi-automatic at the inspection stage, where:

- The **operator performs visual quality control,**
- Simultaneously **loads empty trays and removes filled trays.**

After inspection, accepted cartridges are automatically arranged into rows and transferred via **robotic arms** into plastic trays. Each tray is filled with **50 cartridges (10 rows).** Once full, the tray indexing system rotates, and the process continues continuously.



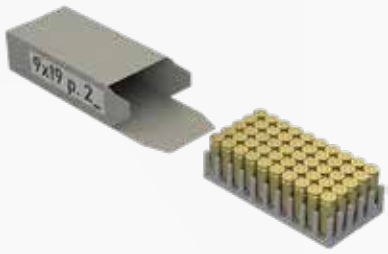





Technical Specifications

PARAMETER	SPECIFICATION		
Application	9x19 mm Visual Inspection Packaging Machine		
Production Speed	120 Cartridges /min		
Supported Calibers	9x19mm		
Dimensions (LxWxH)	3300 x 2240 x 2100 mm		
Weight	Approx. 1900 kg		
Power Supply	380V / 50Hz / 3 Phase		
Inspection	Cartridges geometry by operator		
Input Material/s	9x19mm Cartridges/Plastic Trays		
Output Material	9x19mm cartridges inspected and stacked in plastic trays		
Air Consumption	150L/min@6-7 bar		
Power Consumption	3KW	Pneumatic System	FESTO/SMC
Control System	PLC+ Touch screen	PLC	Siemens
Conversion Kits	Available per request		
Feeding Unit	Hopper & Elevator conveyor		
Labor Requirements	1 operator/shift		

Machine Work Sequence

01 | Cartridge Feeding
Cartridges are supplied from the culator to the inspection station.

02 | Rotary Inspection
Each cartridge rotates 360° in front of the operator for full visual inspection.

03 | Manual Quality Check
Operator inspects cartridges for defects (cracks, primer, bullet, etc.).

04 | Tray Handling (Manual)
Operator places empty trays and removes completed trays simultaneously.

05 | Accepted Cartridge Transfer
Approved cartridges proceed to the stacking section.

06 | Row Arrangement
Cartridges are automatically aligned into 10 rows.

07 | Robotic Loading
Robot arms pick and place cartridges into plastic trays.

08 | Tray Filling
Each tray is filled with 50 cartridges.

09 | Tray Indexing / Rotation
Once full, the tray system rotates to position the next empty tray.

10 | Continuous Operation
The cycle repeats continuously with synchronized inspection and loading.

9x19 mm Packaging (Cartooning) Machine (240 PPM)

Machine Overview

The 9×19 mm Cartridge Packaging Machine is a fully automatic system designed for feeding, orienting, counting, grouping, and packaging cartridges into cartons. The machine integrates separator loading, carton forming, filling, closing, and weight inspection in a continuous process, ensuring high-speed, accurate, and reliable operation with minimal operator intervention.

The system utilizes servo-driven and pneumatic mechanisms for precise handling and synchronization of all process stages.

Sensor-based monitoring and PLC control ensure consistent product quality and operational safety. The modular design allows easy maintenance, quick changeover, and adaptability to different production requirements.

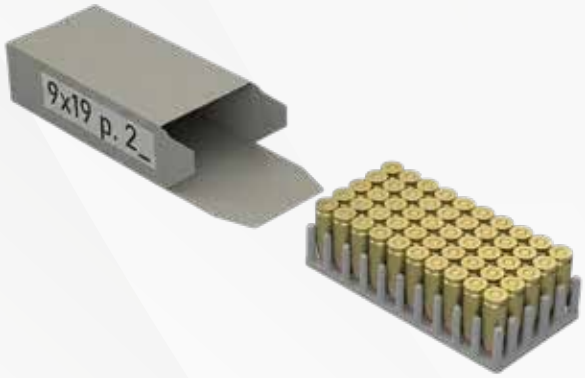



Technical Specifications

PARAMETER	SPECIFICATION		
Application	9x19 mm Packaging Machine (240 PPM)		
Production Speed	240 Cartridges/min (2 stations) 120 Cartridges/min (Single station)		
Supported Calibers	9x18mm / 9x19mm	Power Supply	380V / 50Hz / 3 Phase
Dimensions (LxWxH)	3950 x 2410 x 2150 mm	Weight	Approx. 2500 kg
Inspection	Cartridges orientation /Weight of complete boxes		
Input Material/s	9x19mm Cartridges/Cardboard/Plastic Trays		
Output Material	9x19mm Boxed sealed cartridges		
Number of Stations	12	Power Consumption	5 kW
Air Consumption	250 L/min@6-7 bar	Pneumatic System	FESTO/SMC
Control System	PLC+ Touch Screen	PLC	Siemens
Conversion Kits	Available Per Request		
Feeding Unit	Hopper & Elevator Conveyor		
Labor Requirements	1 operator/Shift		

Machine Work Sequence

01 | Level Control
Feeding bowl checks cartridge level; elevator refills from bunker if low.

02 | Orientation
Cartridges are aligned and directed to the transfer path (kedi yolu).

03 | Transfer & Arrangement
Cartridges are lined up on the conveyor timing belt.

04 | Pre-Check & Rejection
Missing / misaligned cartridges are rejected before loading.

05 | Separator Feeding
Empty separators are loaded from magazine and conveyed into machine.

06 | Separator Positioning
Gripper and servo system place separators in loading position (2 at a time).

07 | Cartridge Loading
Cartridges are pushed pneumatically into separators (50 pcs total).

08 | Transfer to Boxing
Filled separators are moved to the carton loading station.

09 | Carton Forming & Filling
Carton is opened, separator inserted, and box flaps closed.

10 | Weighing & Sorting
Boxes are checked by weight; OK products exit main line, rejects diverted.

Rifle Cartridges Packaging Machine (240 PPM)

Machine Overview

The system is a **high-speed automatic packaging machine** designed for rifle cartridges, combining feeding, carton forming, robotic loading, and quality control in one efficient production line. It is engineered for flexibility and reliability, supporting a wide range of cartridge types and packaging configurations, with a capacity of up to **200 rounds per minute.**

The machine allows **customizable cartridge orientation** inside the box based on customer requirements and is compatible with **all standard cardboard box designs.** Optional changeover kits enable quick adaptation to different box sizes and cartridge quantities.

An **advanced feeding system,** including an elevator, dual feeders, and conveyors, ensures continuous and stable material flow. Cartons are automatically formed from flat cardboard blanks using a **hotmelt gluing system,** providing strong and precise box structure.

A high-speed **six-axis industrial robot** performs accurate pick-and-place operations, ensuring consistent and reliable loading. Integrated quality control includes **cartridge quantity verification per box and box weight checking,** ensuring each package meets strict standards.

The system supports **durable box designs suitable for vibration and noise testing,** ensuring safe transport. Boxes are securely sealed with hotmelt adhesive, while non-conforming products are automatically rejected.





Technical Specifications

PARAMETER	SPECIFICATION		
Application	Rifle Cartridges Packaging Machine (240 PPM)		
Production Speed	240 Cartridges/min (2 stations) 120 Cartridges /min (Single station)		
Supported Calibers	5.56x45 / 7.62x51 / 7.62x39 / 7.62x54 / 5.45x39 etc.		
Dimensions (LxWxH)	4350 x 1950 x 2900 mm		
Weight	Approx. 2500 kg		
Power Supply	380V / 50Hz / 3 Phase		
Inspection	Cartridges Quantity / Weight of Complete Boxes		
Input Material/s	Rifle Cartridges / Cardboard / Hotmelt Glow		
Output Material	Sealed Boxed Cartridges		
Power Consumption	12KW		
Air Consumption	300 L/min@6-7 bar	Pneumatic System	FESTO/SMC
Control System	PLC+ Touch Screen	PLC	Siemens
Quantity in Boxes	Based on Requirmet(20,30,40 or50 Rounds)		
Feeding Unit	Hopper & Elevator Conveyor		
Labor Requirements	1 Operator/Shift		

Machine Work Sequence

01 | Operation Sequence
9x19 Packaging Machine

02 | Feed
Cartridges are supplied via elevator and feeders.

03 | Convey
Cartridges move to the loading station.

04 | Form Box
Cardboard is erected using hotmelt system.

05 | Position
Empty cartons are indexed into loading position.

06 | Robot Load
Six-axis robot places cartridges into cartons.

07 | Quantity Check
Box content is verified.

08 | Seal Box
Cartons are closed and glued.

09 | Weighing
Box weight is checked.

10 | Reject/Accept
Faulty boxes are rejected

11 | Output
Approved boxes exit the line.

Tracer Bullet Loading Press

Machine Overview

The Tracer Bullet Loading Press is a high-performance, fully automated production system designed for manufacturing **5.56 mm L110 and 7.62 mm M62 tracer bullets.** The machine integrates feeding, dosing, pressing, assembly, and quality control operations within a **24-station rotary transfer system,** ensuring high precision and efficiency.

Equipped with **48 indexed transfer molds,** automatic feeding systems, and advanced PLC control, the machine operates with a **single operator** and supports continuous production up to **7,200 hours annually.** All critical processes—including tracer, transition, and igniter compound filling and pressing—are performed with adjustable parameters to ensure consistent product quality and a **scrap rate below 1%.**

The system includes intelligent sensors, automatic rejection of defective parts, integrated cleaning units, and safety-compliant design, making it suitable for high-volume, reliable, and safe tracer ammunition production



Technical Specifications

PARAMETER	SPECIFICATION		
Application	Tracer Bullet Loading Press		
Production Speed	Up to 50 - 60 Cartridges / min PPM		
Supported Calibers	5.56 mm L110 / 7.62 mm M62 Cartridges		
Process Type	Fully Automatic, Multi-Station Rotary Transfer System		
Dimensions (L×W×H)	Approx. 4500 × 3600 × 3600 mm		
Number of Stations	24 Stations	**Weight**	Approx. 8000 kg
Power Supply	380V / 50Hz / 3 Phase	**Power Consumption**	2 kW
Air Consumption	5000–700 L/min @ 6–7 bar		
Feeding Unit	Automatic Liner Feeding (Hopper + Elevator)		
Transfer System	Twin Transfer Molds Withlindexing Table		
Pressing System	Multi-Stage Pressing (Tracer, Transition, Igniter – 3 Stages Each)		
Filling System	Precision Dosing Inits for Tracer, Transition & Igniter Compounds		
Input Materials	Bullet Liners, Tracer Compound, Transition Compound, Igniter Compound, Copper Strip		
Output Product	Fully Assembled Cartridge (Pressed, Covered, Dimensionally Verified)		
Assembly Operations	Funnel Placement/Removal, Bottom Cover Insertion, Folding & Shrinking		
Inspection System	Sensor-Based Presence Control, Alignment Check, Length Measurement		
Quality Control	In-Line Dimensional Control & Process Verification		
Ejection System	Air/Vacuum Mold Cleaning + Final Dust Removal System		
Pneumatic System	FESTO / SMC (or equivalent)		
Control System	PLC + Touch Screen HMI		
PLC	Siemens / Allen-Bradley (Optional)		
Safety Standards	CE, ATEX Compliant, IP65 Protection		
Operator Requirement	1 Operator / Shift		
Changeover / Conversion	Caliber Change Kits Available		
Maintenance	Modular Design for Easy Maintenance and Cleaning		

Shotgun Shell (12 Gauge) Primer Inserting Machine

Machine Overview Primer Inserting Machine

- Casings are automatically loaded from feeders, with height and presence checks
- Primer presence is checked using a proximity sensor at the casing base.
- Casings are flattened to prepare for correct primer insertion and alignment.
- Primer, which is feeded from a vibration bowl, inserted in the casing primer pocket.
- Checking the primer depth.
- Defective or missing primer/casing conditions trigger automatic machine stop.



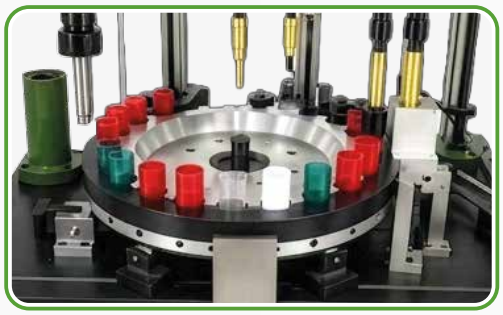



Shotgun Shell (12 Gauge) Loading & Assembly Machine

Machine Overview Loading Machine

- Propellant is loaded into the casing
- Propellant height is checked; incorrect levels stop the machine.
- Powder level is verified by sensor control.
- Wad is inserted and its height is checked.
- SLUG is loaded via vibrator system, and presence is verified.
- Final cartridge head crimping is performed.
- Final height and defect inspection is completed; out-of-tolerance cartridges stop the line.





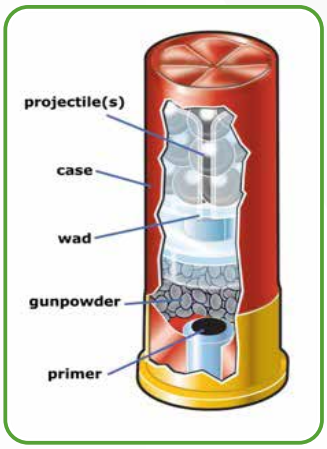

Case Length Trimming & Extractor Grooving

Machine Overview

The Case Trimming Length & Extractor Grooving Machine is a high-precision, fully automated solution designed for the machining of metallic cartridge cases after the drawing process. The machine performs two critical operations in a single production cycle: trimming the case mouth to the required length and forming the extractor groove according to the cartridge specifications







Technical Specifications

PARAMETER	SPECIFICATION
Application	Case Length Trimming & Extractor Grooving
Production Speed	60 PPM
Supported Calibers	9x18,9x19,5.56x45, 7.62x51, 7.62x39
Dimensions (LxWxH)	1600 x 1100 x 2500 mm
Weight	Approx. 1200 kg
Power Supply	380V / 50Hz / 3 Phase
Input Material/s	Long Cases Without Groov
Output Material	Length Trimmed and Grooved Case (Final Case)
Power Consumption	2KW
Pneumatic System	FESTO, SMC
Air Pressure	150L/min @5-6 bar
Control System	PLC+ Touch Screen
PLC	Siemens

Machine Work Sequence

1	Cartridge cases are automatically fed from the hopper to the machining station.
2	Each case is precisely positioned and securely clamped.
3	The trimming unit machines the case mouth to achieve the specified case length.
4	The case is indexed to the extractor groove station, where the groove is machined according to the cartridge drawing.
5	The finished case is automatically unloaded and transferred to the output collection system.
6	The cycle repeats continuously for automatic production.

Case Flash Hole Drilling Machine

Machine Overview

The Case Flash Hole Drilling Machine is a high-precision, fully automatic machine designed to produce flash holes in metallic cartridge cases. The machine ensures accurate hole diameter, position, and consistency, which are critical for reliable primer ignition and ammunition performance. Cartridge cases are automatically fed, positioned, and clamped before the drilling operation. A high-speed precision drilling unit creates the flash hole according to the cartridge specifications. The machine is equipped with a PLC-based control system and HMI interface, providing easy operation, process monitoring, and parameter adjustment.



Technical Specifications

PARAMETER	SPECIFICATION
Application	Case Flash Hole Drilling Machine
Production Speed	60 PPM for Small Calibers- 30 PPM for 12.7
Supported Calibers	9x18,9x19,5.56x45, 7.62x51, 7.62x39,12.7x99 etc.
Dimensions (LxWxH)	2400 x 1400 x 3200 mm
Weight	Approx. 1700 kg
Power Supply	380V / 50Hz / 3 Phase
Input Material/s	Cases Without Flash Hole
Output Material	Cases With Flash Hole
Power Consumption	4 kW
Pneumatic System	FESTO, SMC
Air Pressure	300 L/min @5-6 bar
Control System	PLC+ Touch Screen
PLC	Siemens

Machine Work Sequence

1	Cartridge cases are automatically fed from the hopper to the drilling station.
2	Each case is precisely positioned and securely clamped.
3	The drilling unit advances and drills the flash hole according to the specified dimensions.
4	After drilling is completed, the tooling retracts and the case is released.
5	The finished case is automatically unloaded and transferred to the output collection system.
6	The cycle repeats continuously for automatic production.

ARGE ROBOTİK

Advanced Automation Solutions for Ammunition Industry

Established in 2007, ARGE Robotik is a specialized engineering and automation company focused on the development and manufacture of advanced machinery for ammunition assembly, finishing, inspection, and packaging operations.

With extensive experience in defense manufacturing automation, we provide high-performance production solutions for small and medium-caliber ammunition manufacturers worldwide. Our equipment is designed to ensure maximum production efficiency, consistent product quality, and reliable operation under demanding industrial conditions.

Our product range includes primer inserting-crimping machines, sealing and varnishing machines, loading and assembly machines, UV sealing systems, visual and optical inspection machines, ammunition packaging equipment, belt linking machines, tracer bullet assembly presses, flash hole drilling machines, trimming and grooving machines, feeders, vibration systems, elevator conveyors and specialized systems for military ammunition production.

Manufactured in our modern facility in Istanbul, Türkiye, every ARGE Robotik machine is developed using advanced engineering principles, high-quality industrial components, and robust automation technologies. Our solutions are trusted by government arsenals, defense contractors, and commercial ammunition manufacturers in more than 40 countries.

Beyond individual machines, ARGE Robotik delivers complete production cells and integrated automation solutions, helping customers increase productivity, improve quality control, reduce operational costs, and optimize manufacturing performance.

ARGE ROBOTİK

Product Portfolio

- Primer Inserting Machines
- Loading and Assembly Machines
- Sealing, Varnishing and Lacquering Machines
- UV Sealing Systems
- Visual Inspection Machines
- Optical (Camera-Based) Inspection Machines
- Ammunition Packaging Machines
- 9×19 mm Packaging Machines
- Belt Linking Machines
- 40×53 mm Linking Machines
- Trimming and Grooving Machines
- Flash Hole Drilling Machines
- Tracer Bullet Assembly Presses
- Hand Grenade Fuze Loading Machines
- Customized Automation and Robotic Systems

Why ARGE Robotik?

- Specialized expertise in ammunition assembly and finishing processes
- More than 20 years of engineering and automation experience
- Customers in over 40 countries worldwide
- Advanced automation and robotic integration capabilities
- High-quality components from internationally recognized suppliers
- Comprehensive installation, training, and after-sales support
- Customized solutions tailored to customer requirements

At ARGE Robotik, we are committed to delivering innovative, reliable, and efficient manufacturing solutions that support the evolving needs of the global defense and ammunition industry

Precision • Reliability • Performance

ARGE ROBOTİK

ADVANCED AUTOMATION

FOR AMMUNITION MANUFACTURING

ARGE ROBOTİK

ADVANCED AUTOMATION
FOR AMMUNITION MANUFACTURING



ARGE ROBOTİK OTOMASYON SAN. TİC. LTD. ŞTİ.

Aydınlar Mah. Mermerciler Cad.
No: 12 Çekmeköy / İstanbul

+90 216 527 27 03
+90 535 609 01 08
sales@argerobotik.com

argerobotik.com

argerobotik
argerobotik
argerobotik
argerobotik.com

ATEX | CE | IP65 | Facility Security Clearance Military Secret | ISO 9001 - 2015